Electrolux PROFESSIONAL

Salamanders
Electric Salamander, open on 3 sides - 600mm

ITEM #

MODEL #

NAME #

SIS #

AIA #



283014 (E0UUAEBOMOA)	Electric Salamander, open on 3 sides, 600 mm, accepts GN 1/1
283015 (E0UUADBOMOA)	Electric Salamander, open on 3 sides, 600 mm, accepts GN 1/1

Short Form Specification

Item No.

Constructed in AISI 304 stainless steel. Table top model can be hanged on the wall with wall brackets (optional). Open on 3 sides. Incoloy heating elements placed in the upper deck, and can be tilted for easy cleaning. Upper desk is movable, sliding up and down along runners. 2 independent cooking areas managed by 2 separate energy regulator. Air vents along the upper side for evacuating heat and smoke. Extractable drip trays and chromium-plated steel grids for easy cleaning.

Main Features

- Cooking plate size: 600 x 350 mm accept GN 1/1.
- Heat control with energy regulator.
- Open 3 sides for rapid cooling and ease of use.
- Heating elements can be tilted for easy cleaning under the moving deck.

Construction

- Made of AISI 304 stainless steel.
- Air vents along the upper side for evacuating heat and smoke.
- Removable stainless steel drip tray.
- Movable upper plate.
- Chromium-plated steel grid with a safety stop to avoid accidental fall.
- Table top unit can be wall mounted with dedicated optional accessory.
- 4 rubber feet.
- 2 indipendent tilting incoloy armoured heating elements.

Optional Accessories

- Wall mounted brackets kit for salamanders open on 3 sides — PNC 283035 ❑

APPROVAL:

Salamanders
Electric Salamander, open on 3 sides - 600mm

Front

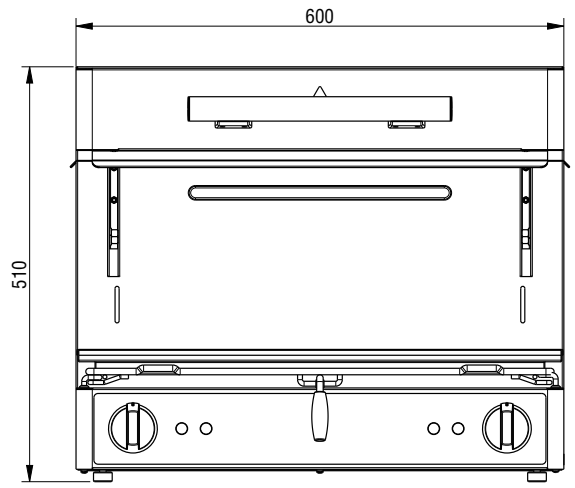

Side

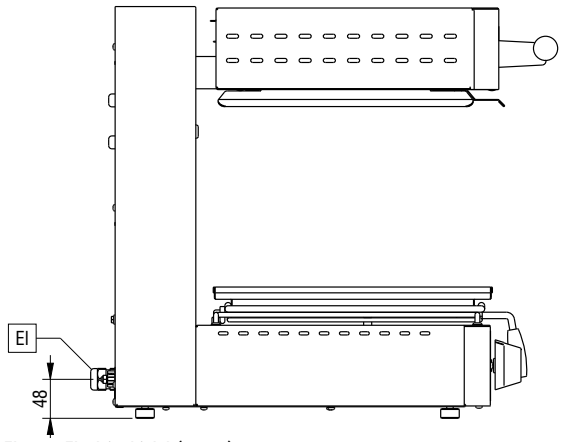

EI = Electrical inlet (power)

Top

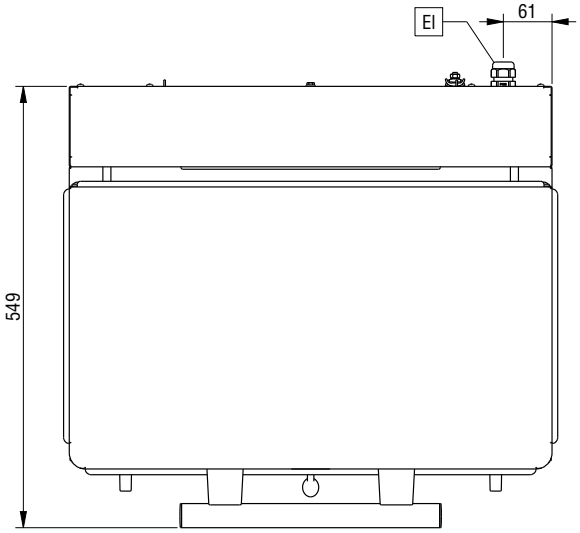

Electric

Supply voltage:	
283014 (E0UUAEBOMOA)	220-240 V/1 ph/50/60 Hz
283015 (E0UUADBOMOA)	380/415 V/3N ph/50/60 Hz
Electrical power max.:	4 kW

Key Information:

External dimensions, Width:	600 mm
External dimensions, Depth:	549 mm
External dimensions, Height:	510 mm
Net weight:	48 kg

The company reserves the right to make modifications to the products without prior notice. All information correct at time of printing.

2026.11.19